68.112

ISTRUZIONI DI MONTAGGIO
FITTING INSTRUCTION
"Acciaio / Steel"

= 15 min.

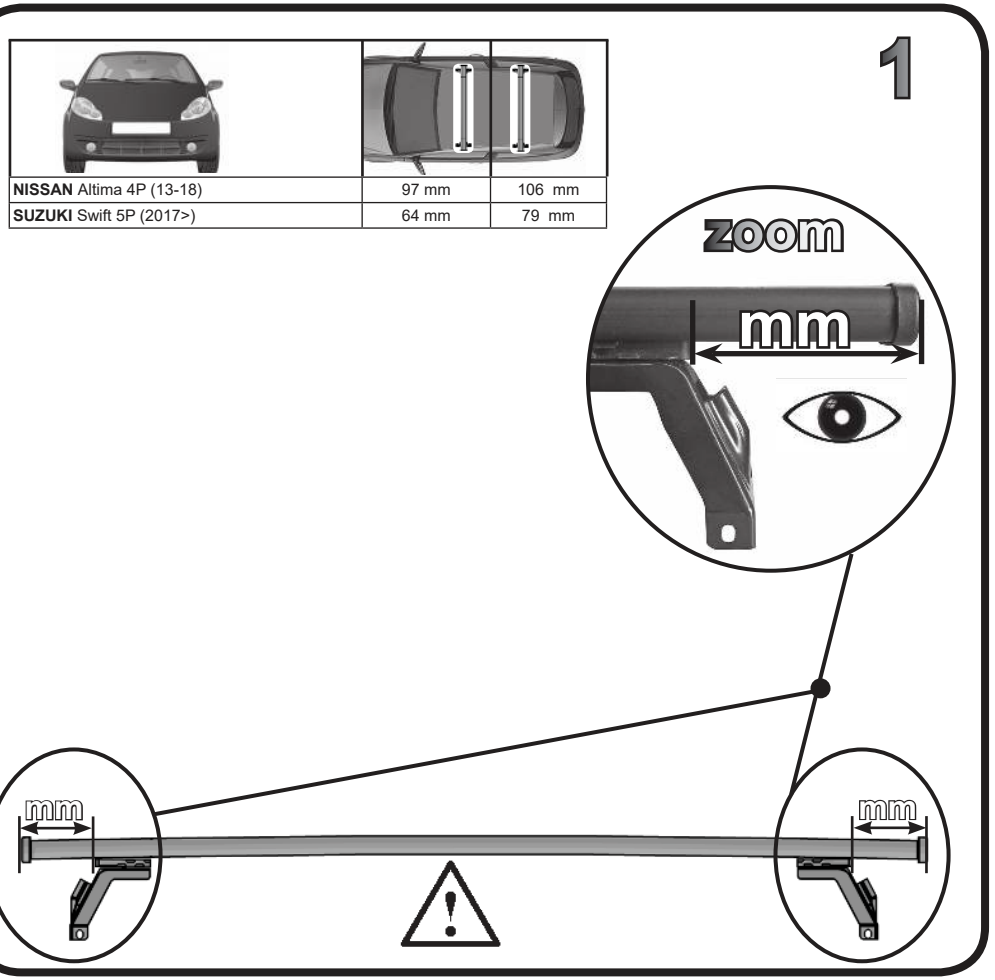

NISSAN Altima 4P (13-18)	97 mm	106 mm
SUZUKI Swift 5P (2017>)	64 mm	79 mm

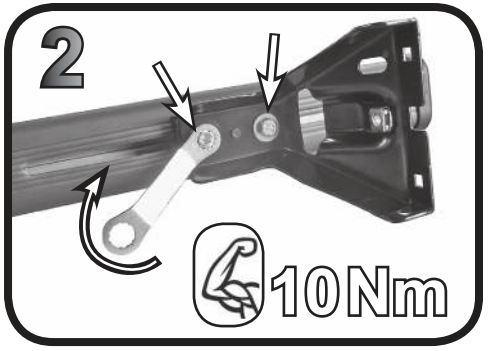

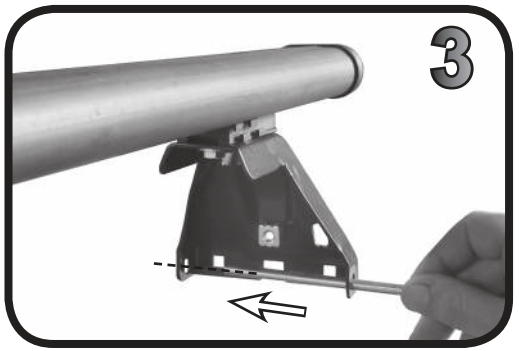

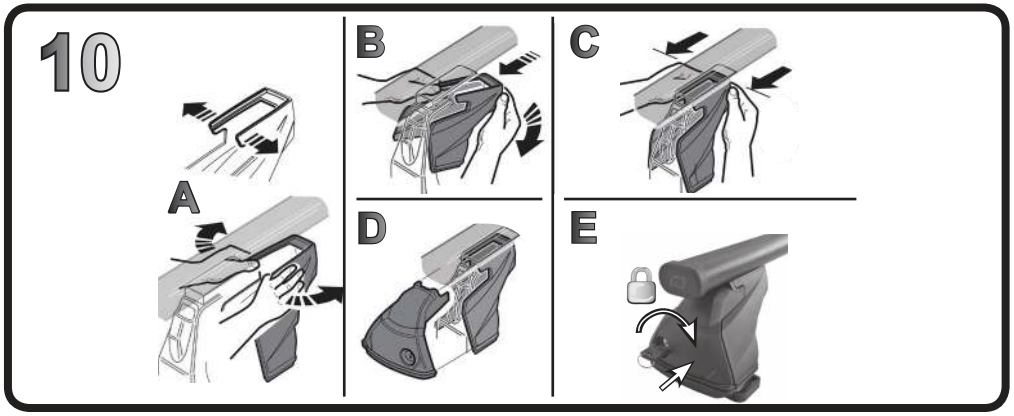

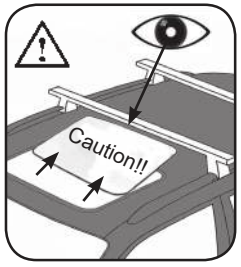

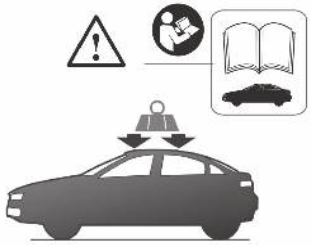

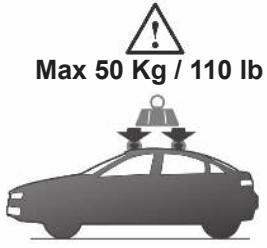

G3 S.p.A. - Via S.Allende, 15. Cap 42020,
Quattro Castella Reggio Emilia- Italy
www.g3spa.it - info@g3spa.it
Tel. 0522 880635 Fax. 0522 880306

COD. AO.498 / ACC

REV. 03

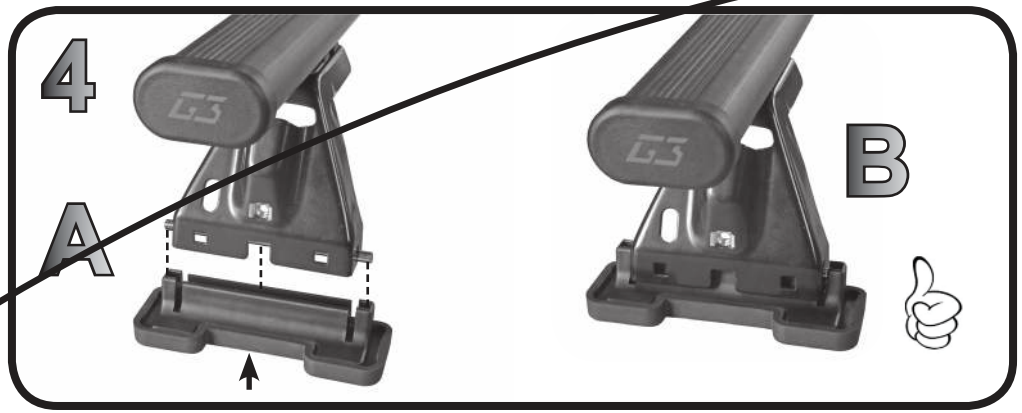

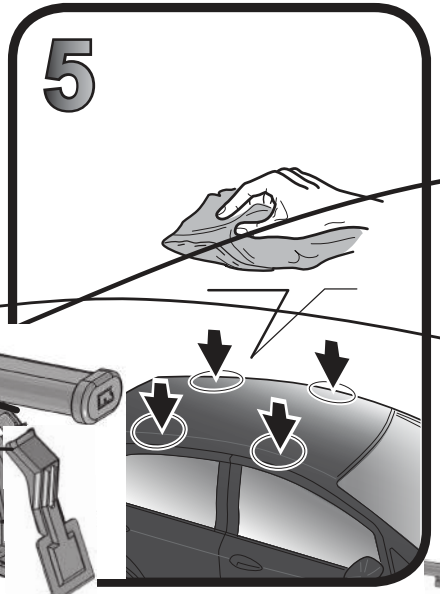

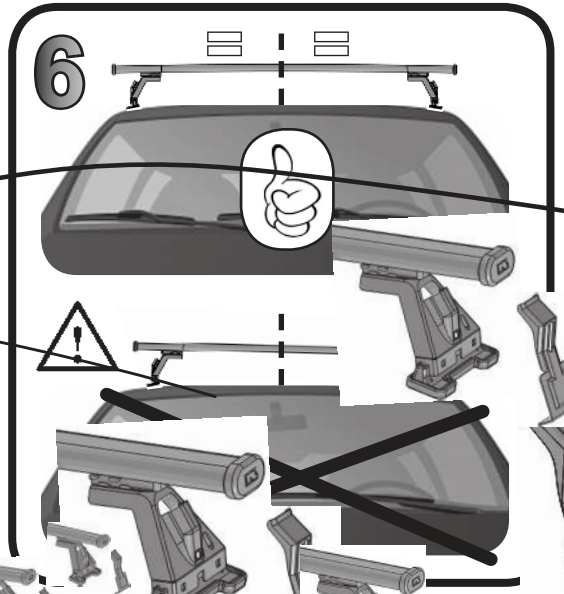

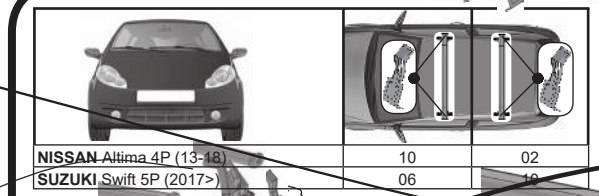

NISSAN Altima 4P (13-18)	10	02
SUZUKI Swift 5P (2017>)	06	10

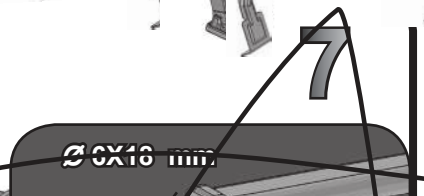

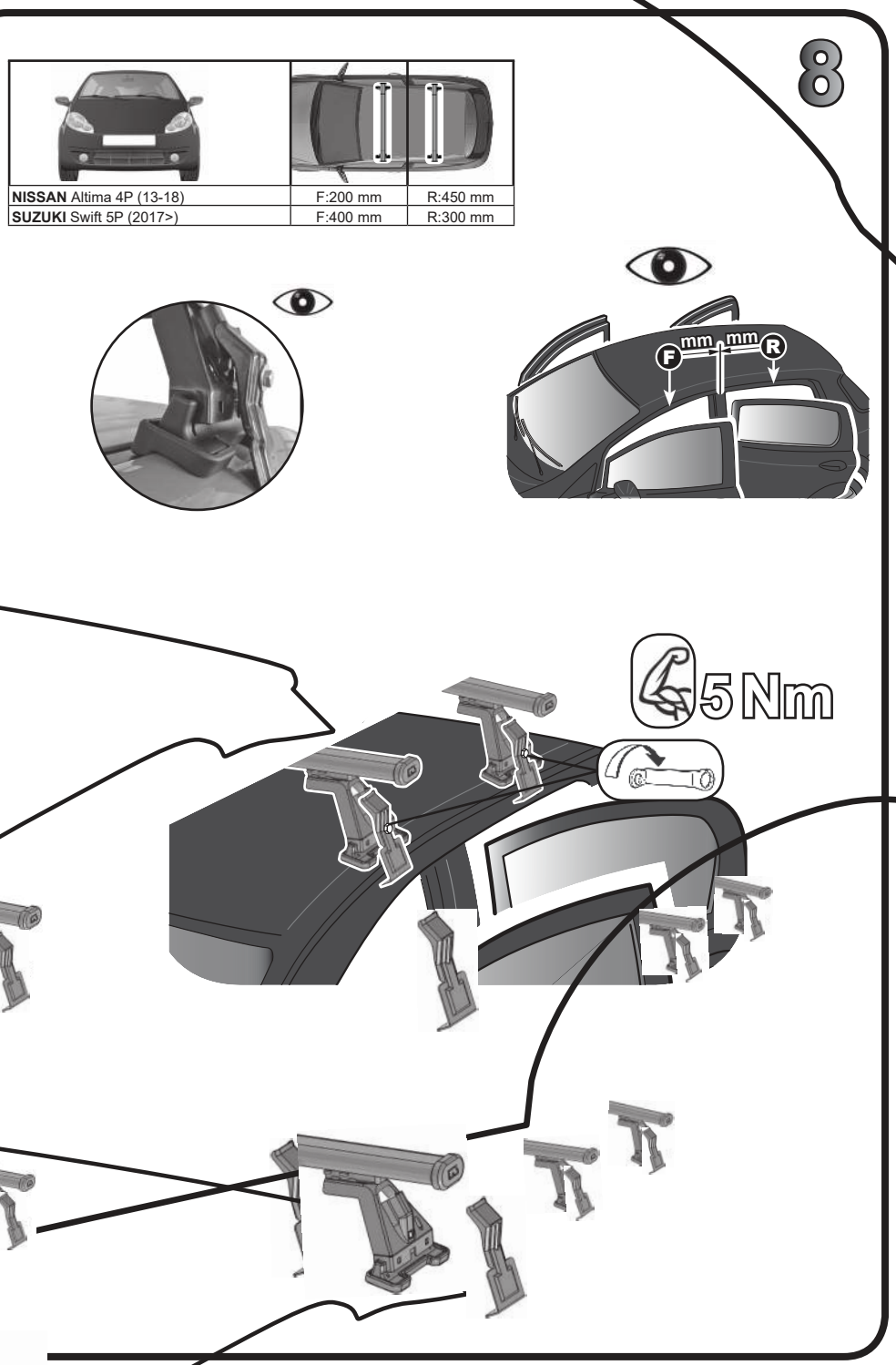

68.112

ISTRUZIONI DI MONTAGGIO
FITTING INSTRUCTION
"Alluminio / Aluminium"

= 15 min.

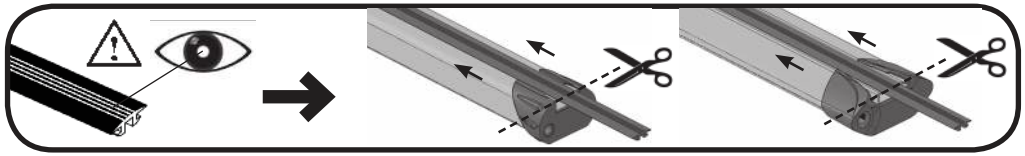

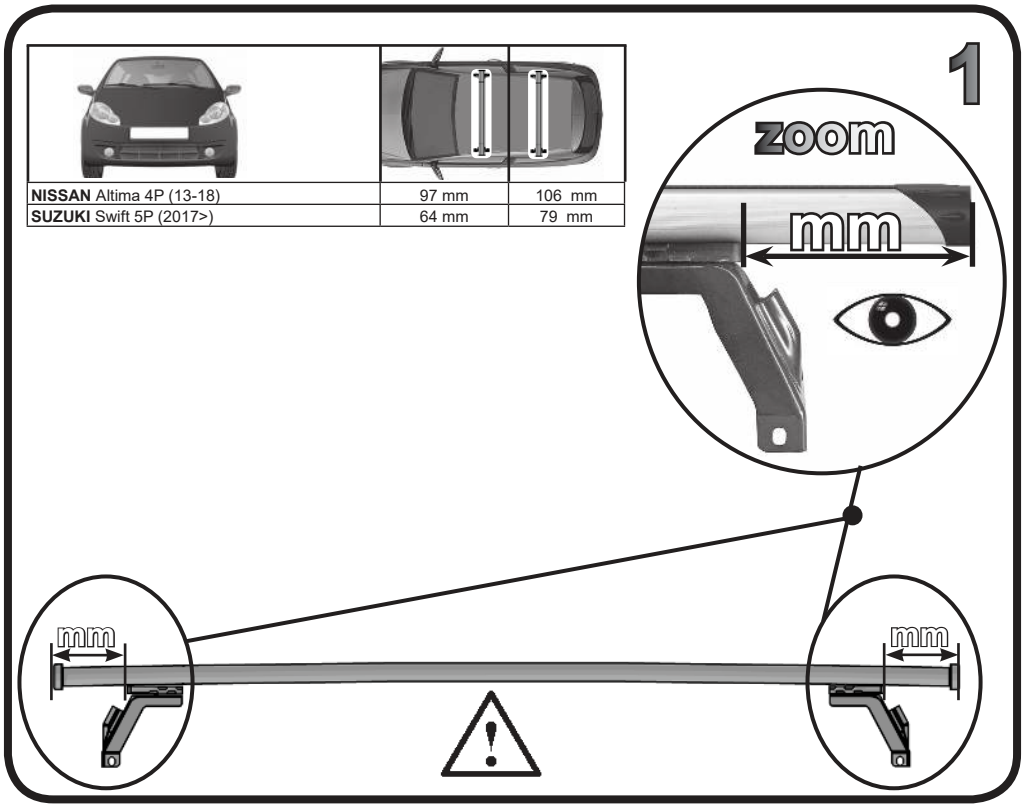

NISSAN Altima 4P (13-18)	97 mm	106 mm
SUZUKI Swift 5P (2017>)	64 mm	79 mm

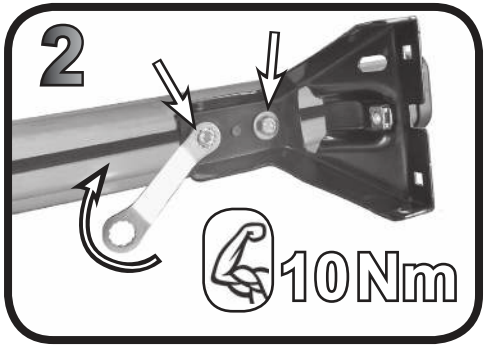

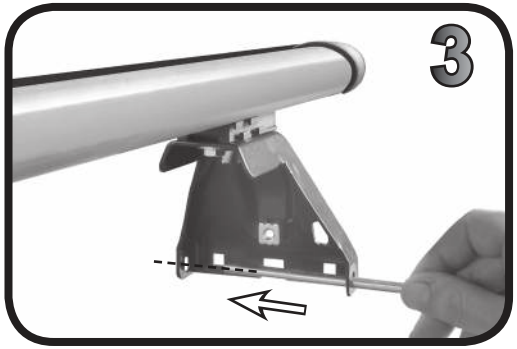

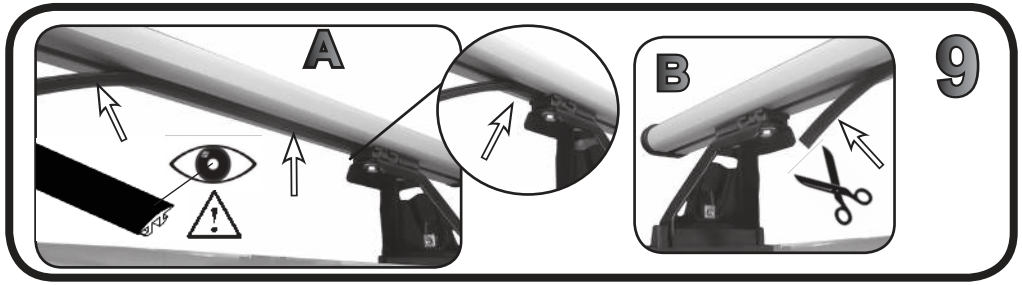

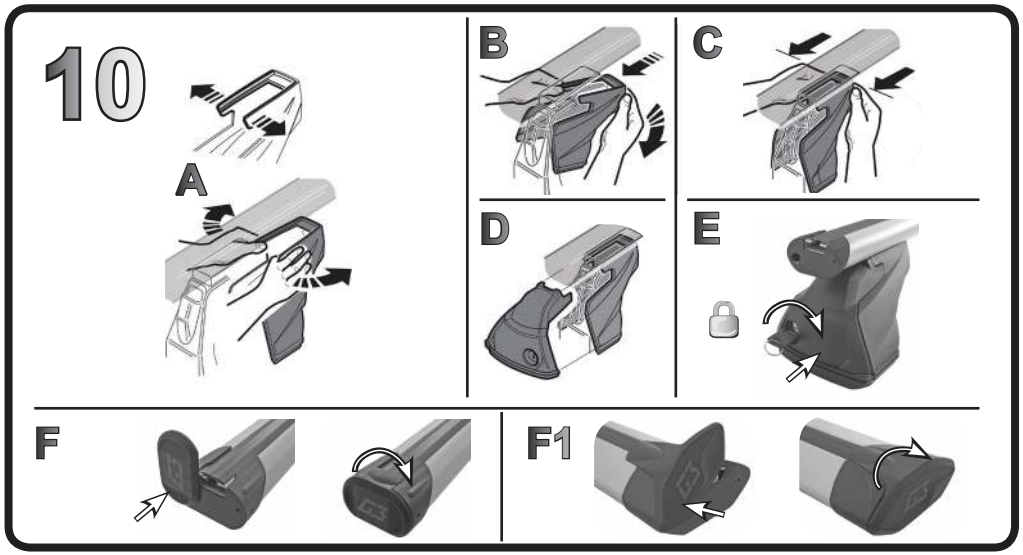

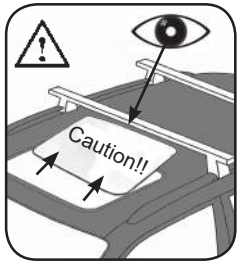

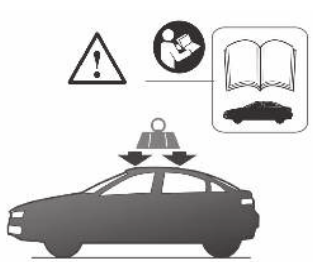

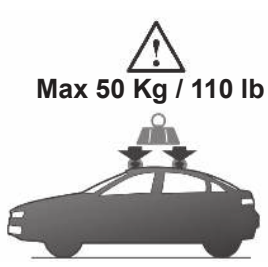

G3 S.p.A. - Via S.Allende, 15. Cap 42020,
Quattro Castella Reggio Emilia- Italy
www.g3spa.it - info@g3spa.it
Tel. 0522 880635 Fax. 0522 880306

COD. AO.498 / ALL
REV. 03

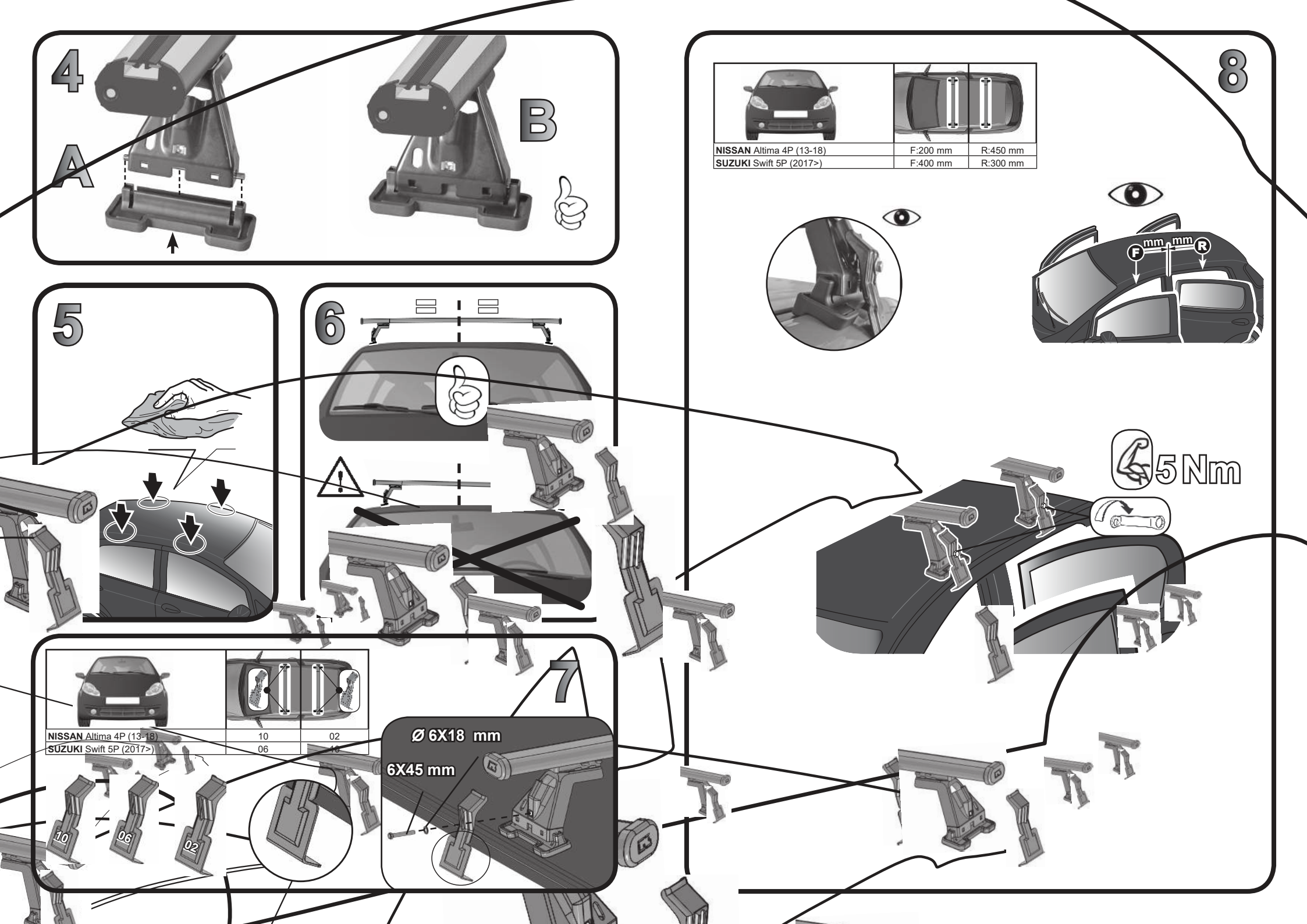

NISSAN Altima 4P (13-18)	F:200 mm	R:450 mm
SUZUKI Swift 5P (2017>)	F:400 mm	R:300 mm

NISSAN Altima 4P (13-18)	10	02
SUZUKI Swift 5P (2017>)	06	10