INFLATABLE SOFA YOLCO GS2W

SPECIFICATION:
• Dimensions (W x H x D):
inflated - 1710 x 840 x 680 mm (67.3 x 33.1 x 26.8 in)
folded – 600 x 200 x 200 mm (23.6 x 2.9 x 2.9 in)
• Net weight: 6.3 kg (13.9 lb)
• Max load: 400 kg (881.8 lb)
• Max pressure: 3 PSI
• Valve type and diamater: Boston valve - Ø 21 mm (0.86 in)
• Material: Polyester, PVC

PACKAGE CONTENTS:
• Inflatable sofa
• Travel handbag
• Repair patch
• Anchors (x4)





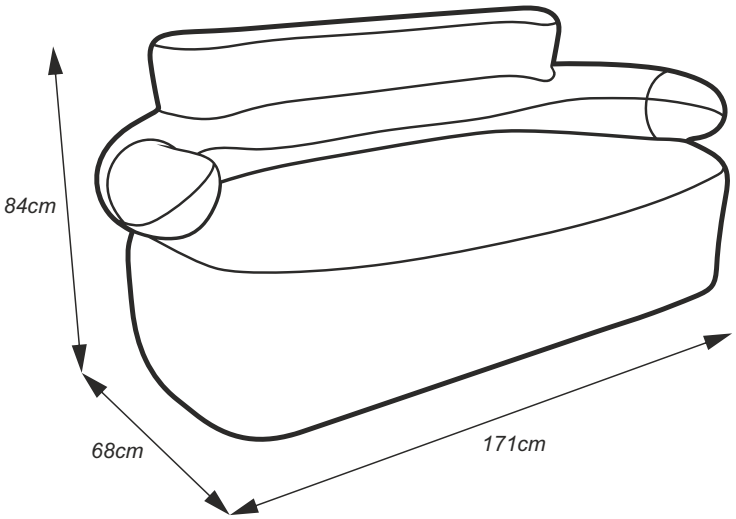

Package

MODEL	GS2W
Single item dimension (including package)	62(W) x 22(H) x 22cm(D)
Weight of single item (including package)	7,5kg
Material	-
Available colours	-
Quantity in master carton	-
Dimention of master carton	-
Weight of master carton	-
Quantity on europalette (180x120x80)	25

GS2W

5 902721 197111

EAN code: 5902721197111

www.arkas.pl • www.yolco.pl
ARKAS Sp. z o.o. ul. Kuziennicza 4, 59-400 Jawor, Polska, tel: +48 76 871-19-74, fax: +48 76 870-21-45, e-mail: dzialhandlowy@arkas.pl