68.104

ISTRUZIONI DI MONTAGGIO
FITTING INSTRUCTION
"Acciaio / Steel"

= 15 min.

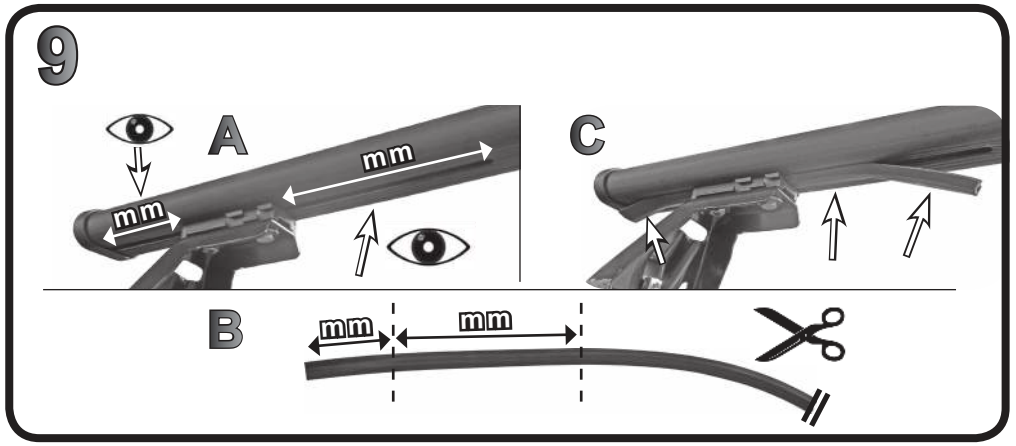

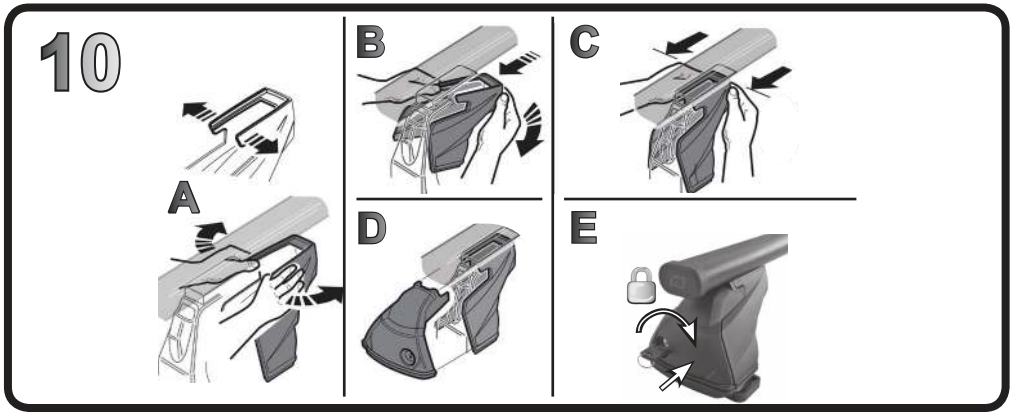

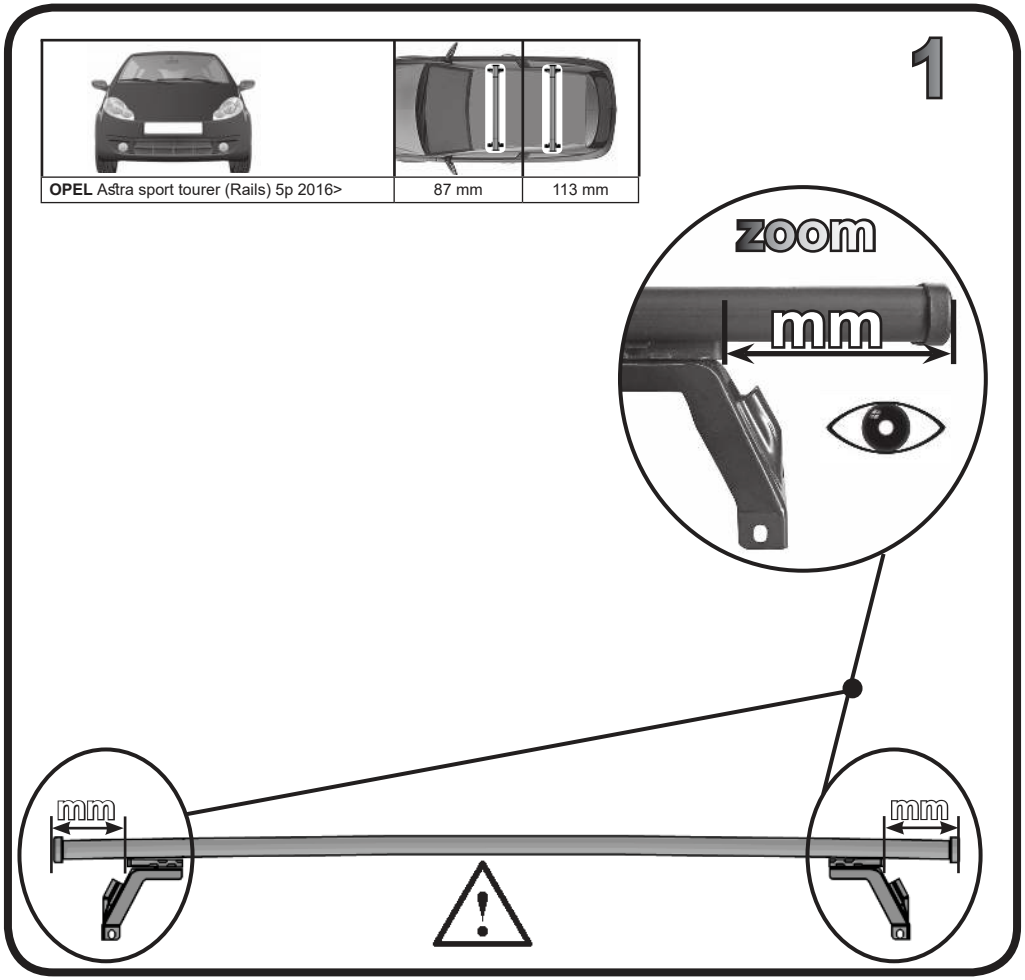

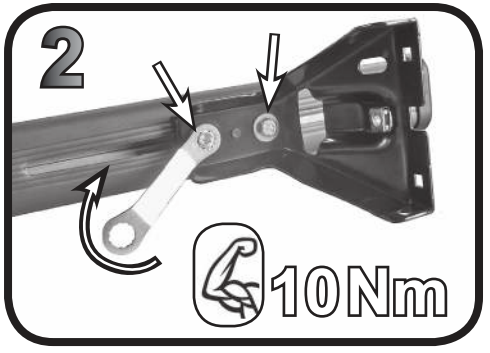

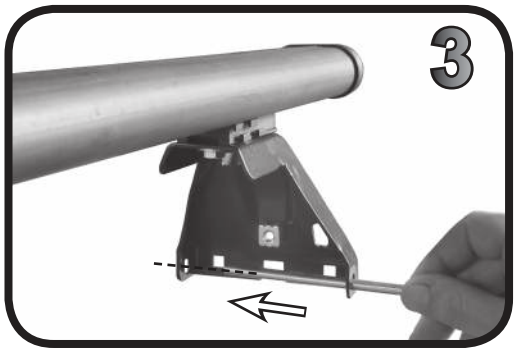

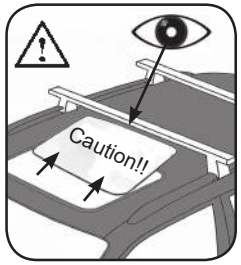

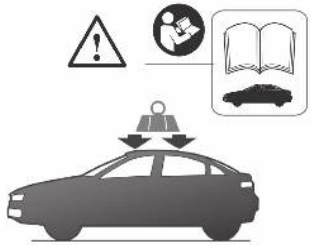

G3 S.p.A. - Via S.Allende, 15, Cap 42020,
Quattro Castella Reggio Emilia- Italy
www.g3spa.it - info@g3spa.it
Tel. 0522 880635 Fax. 0522 880306

COD. AO.485 /A CC
REV. 03

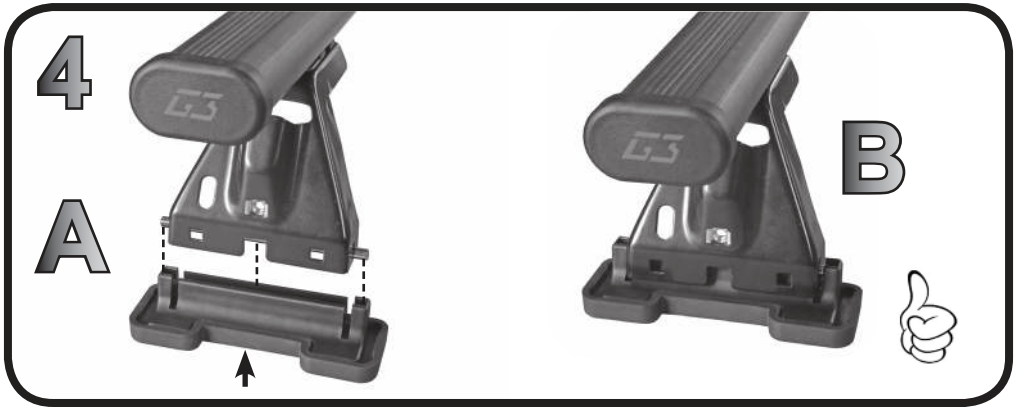
4
A
B

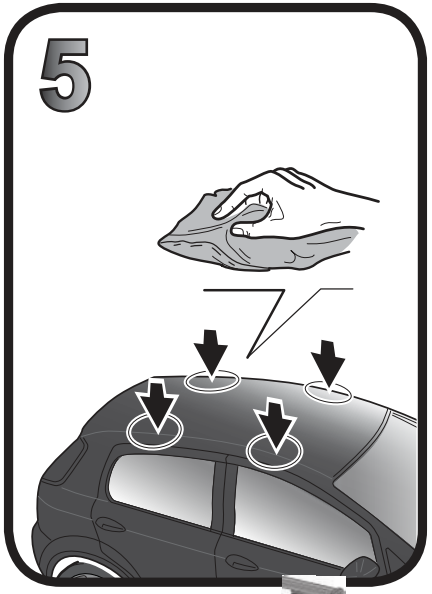
5

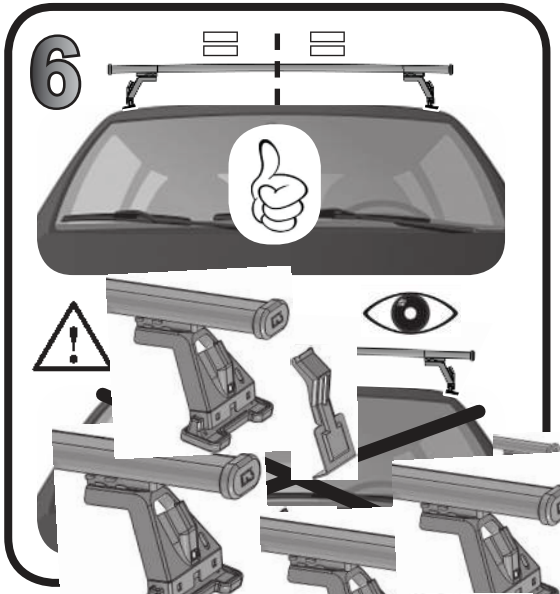
6

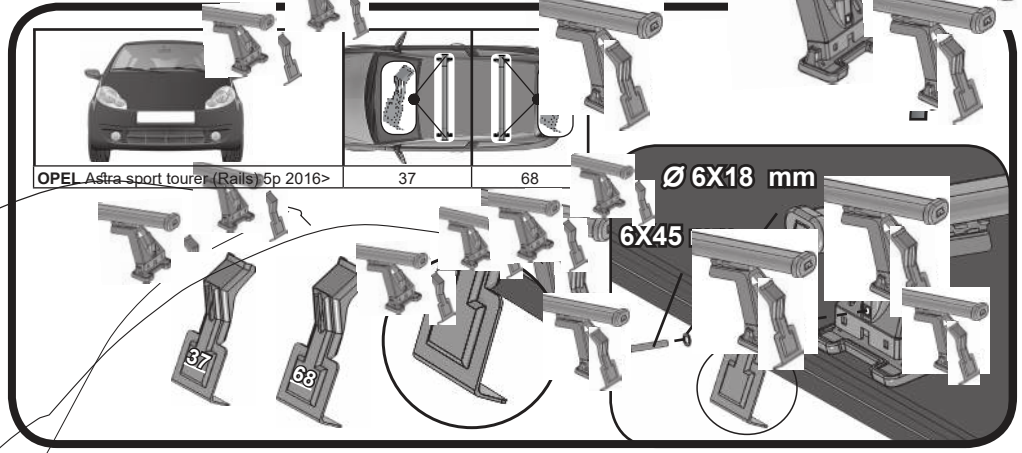
OPEL Astra sport tourer (Rails) 5p 2016>
37
68
Ø 6X18 mm
6X45
37
68

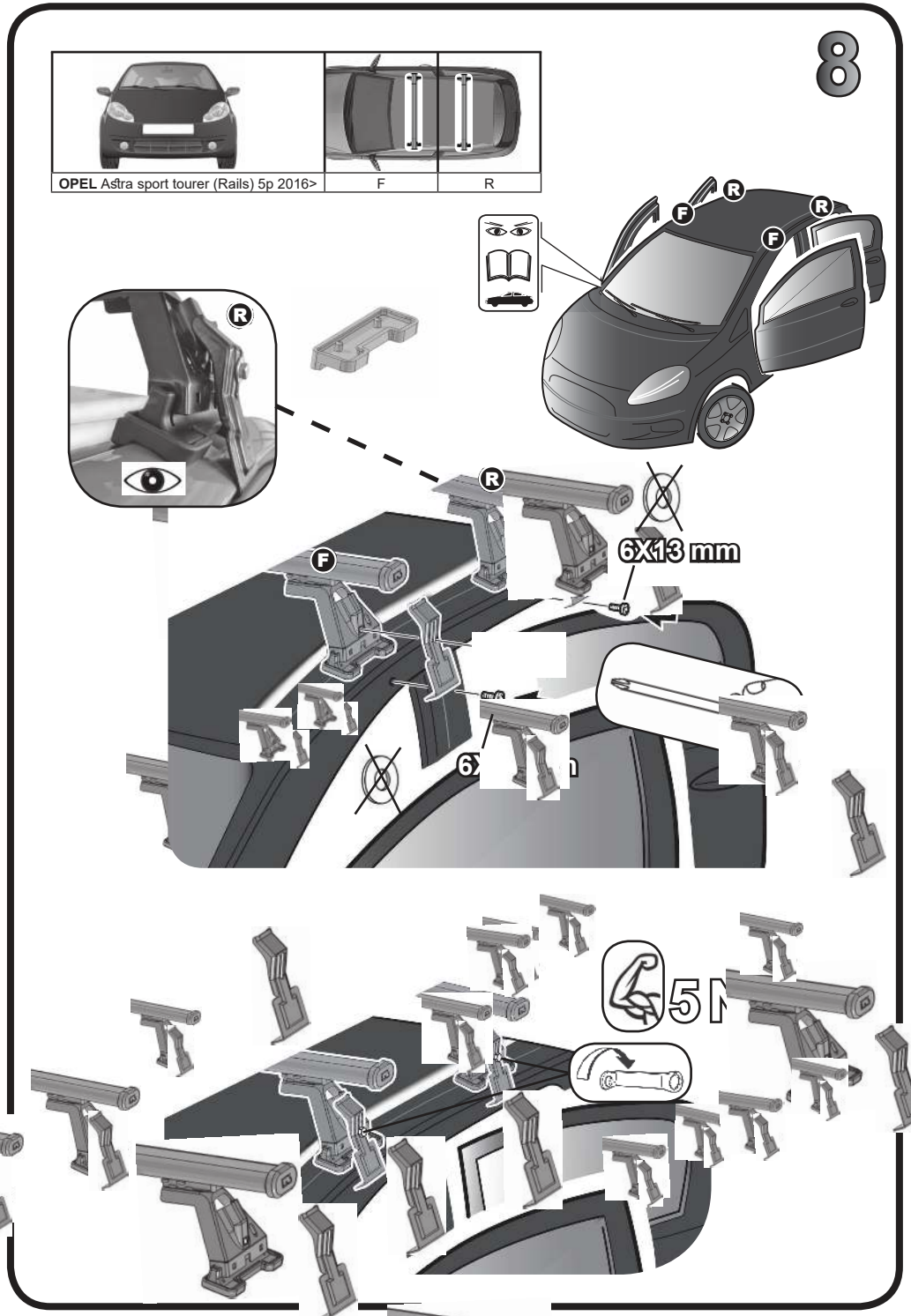
8
OPEL Astra sport tourer (Rails) 5p 2016>
F
R
R
F
R
F
R
6X13 mm
5 N

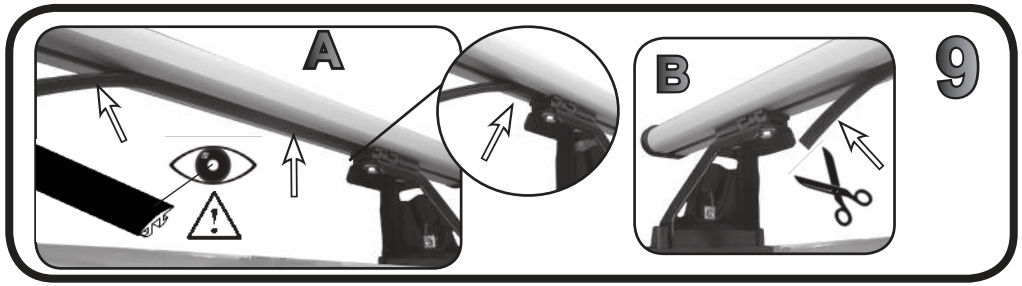

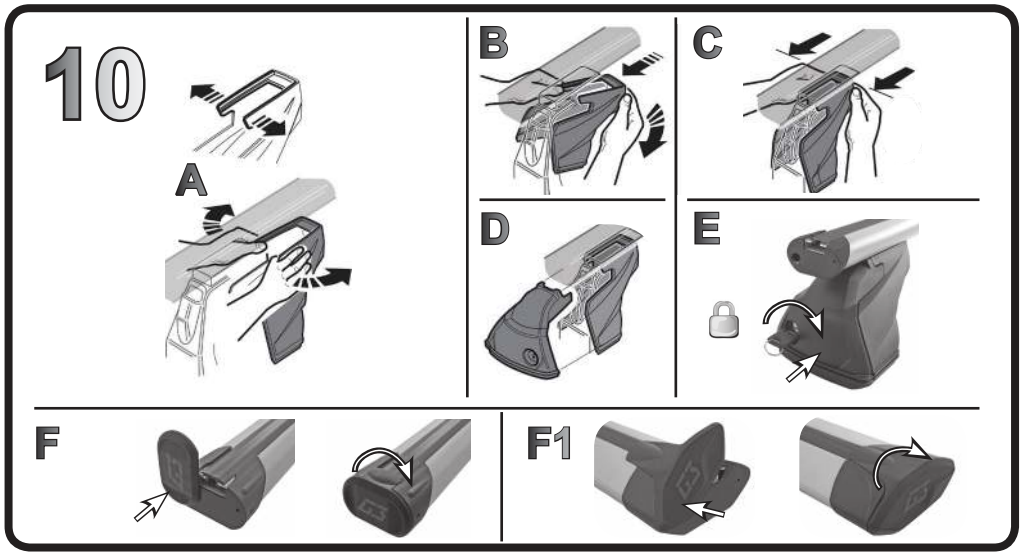

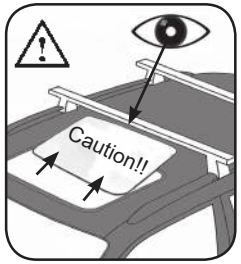

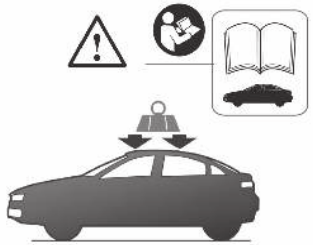

G3 S.p.A. - Via S.Allende, 15, Cap 42020,
Quattro Castella Reggio Emilia- Italy
www.g3spa.it - info@g3spa.it
Tel. 0522 880635 Fax. 0522 880306

COD. AO.485 / ALL
REV. 03

68.104

G3

ISTRUZIONI DI MONTAGGIO
FITTING INSTRUCTION
"Alluminio / Aluminium"

= 15 min.

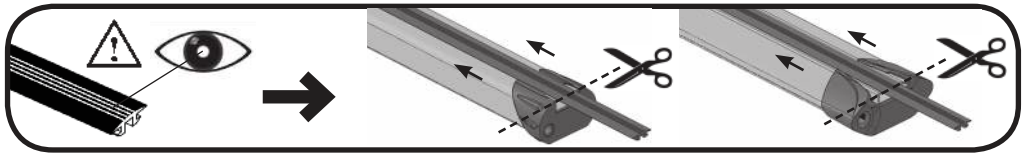

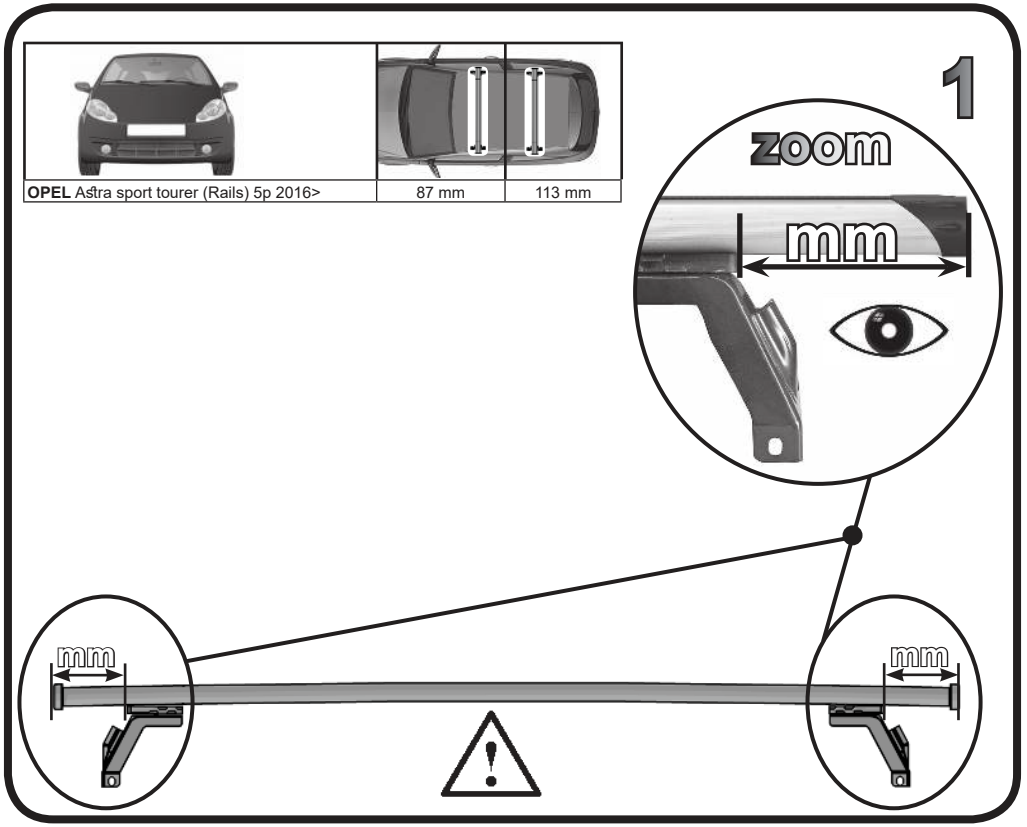

OPEL Astra sport tourer (Rails) 5p 2016>	87 mm	113 mm

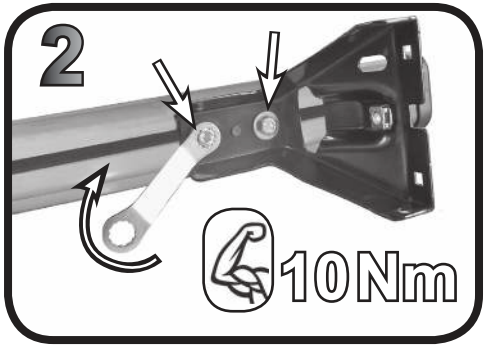

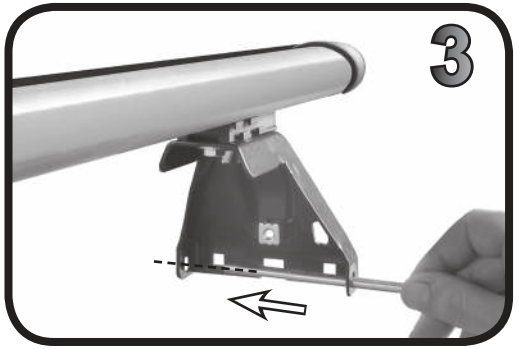

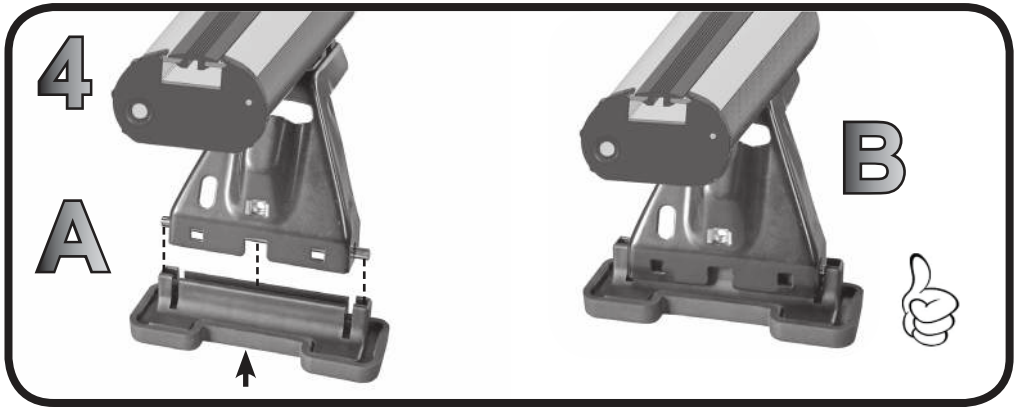
4
A
B

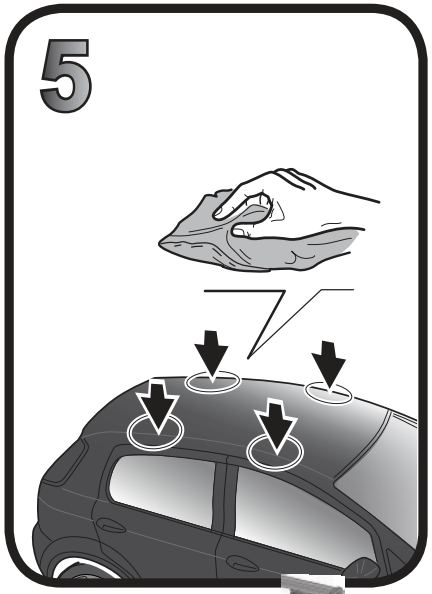
5

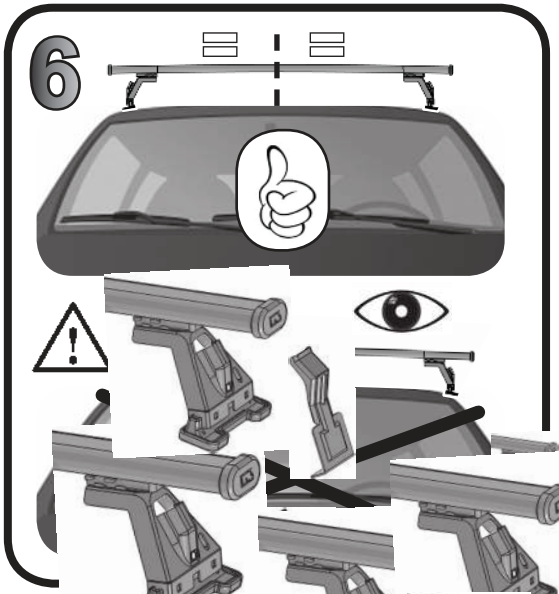
6

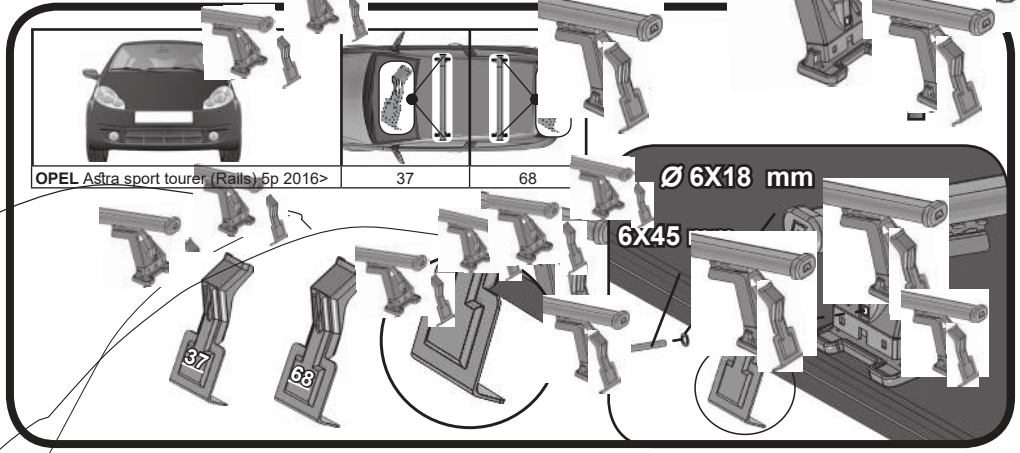
OPEL Astra sport tourer (Rails) 5p 2016>
37
68
Ø 6X18 mm
6X45
37
68

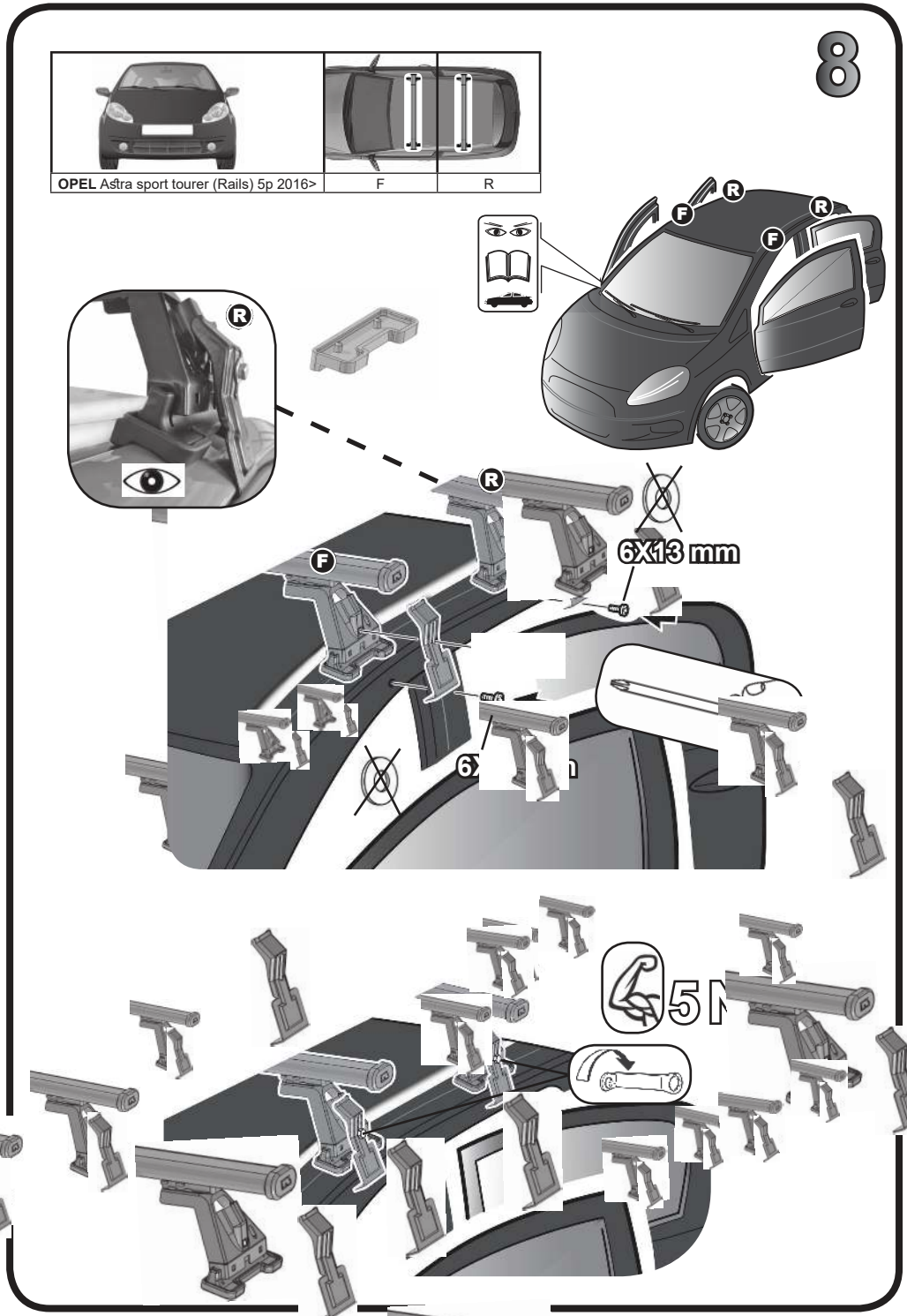
8
OPEL Astra sport tourer (Rails) 5p 2016>
F
R
F
R
F
R
R
F
6X13 mm
5 N