INFLATABLE SOFA YOLCO GS6KW

SPECIFICATION:
• Dimensions (W x H x D):
inflated - 2185 x 830 x 820 mm (86.0 x 32.7 x 32.3 in)
folded – 520 x 290 x 290 mm (20.5 x 11.4 x 11.4 in)
• Net weight: 10.0 kg (22.0 lb))
• Max load: 300 kg (661.4 lb)
• Max pressure: 2.5 PSI
• Valve type and diamater: Boston valve - Ø 21 mm (0.86 in)
• Material: Polyester, PVC





PACKAGE CONTENTS:
• Travel handbag
• Repair patch
• Anchors (x4)

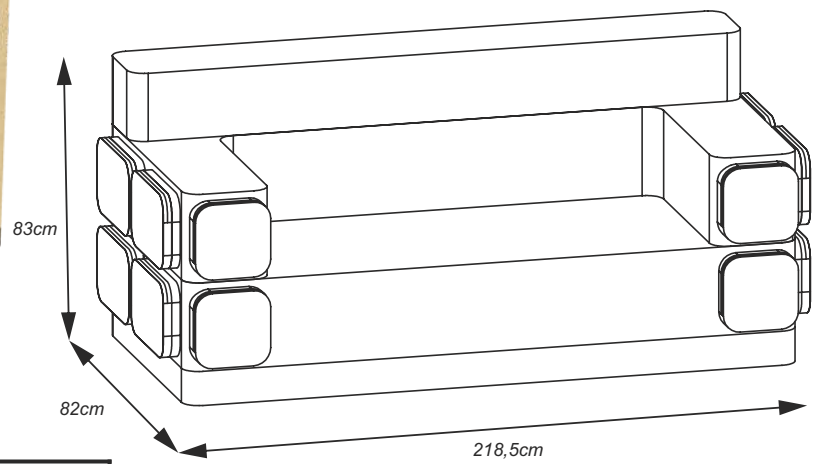

Package

MODEL	GS6KW
Single item dimension (including package)	54(W) x 27(H) x 27,5cm(D)
Weight of single item (including package)	9,06kg
Material	-
Available colours	-
Quantity in master carton	1
Dimention of master carton	54(W) x 27(H) x 27,5cm(D)
Weight of master carton	9,06kg
Quantity on europalette (180x120x80)	25

GS6KW

5 902721 198019

EAN code: 5902721198019

www.arkas.pl • www.yolco.pl
ARKAS Sp. z o.o. ul. Kuziennicza 4, 59-400 Jawor, Polska, tel: +48 76 871-19-74, fax: +48 76 870-21-45, e-mail: dzialhandlowy@arkas.pl